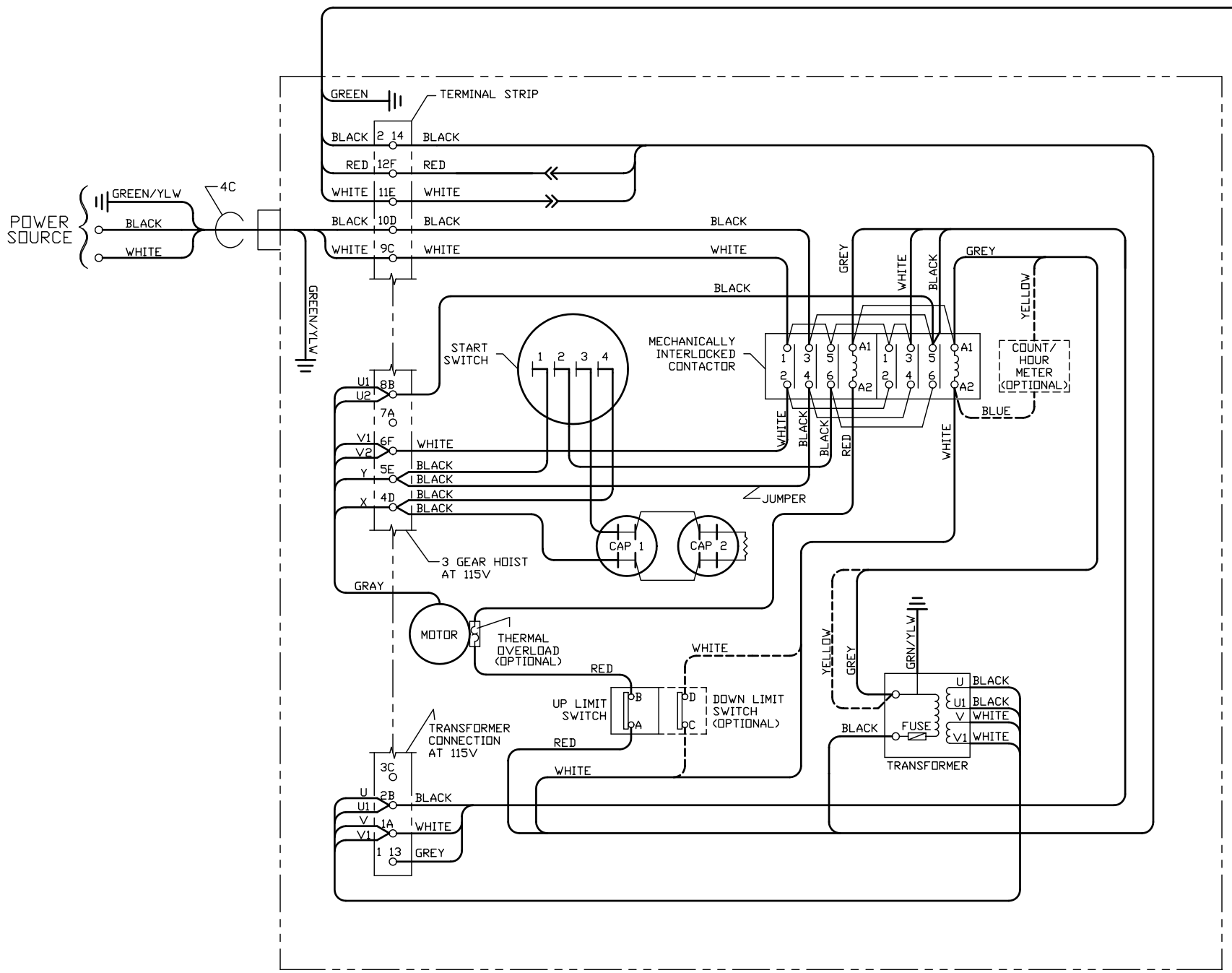

ELECTRIC CHAIN HOIST

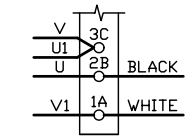

TRANSFORMER CONNECTION AT 230V

UNITS LISTED BY GEAR REDUCTION FOR MOTOR TERMINAL CONNECTIONS	
2 GEAR	3 GEAR
SNER003S	SNER005L SNER005S SNER010L SNER010S SNER020L SNER030C

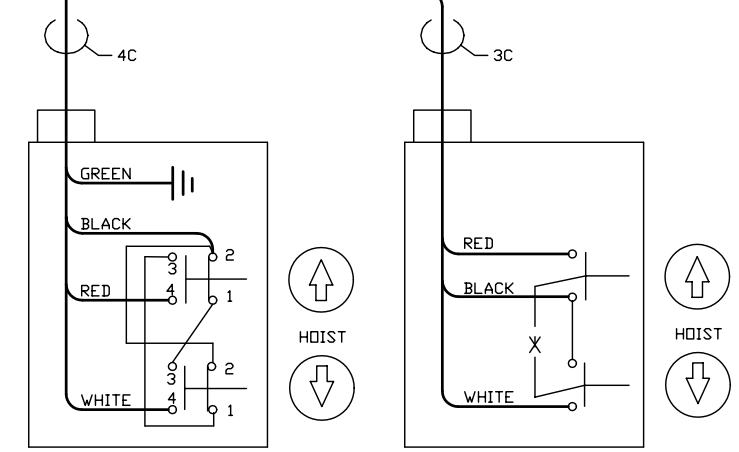

NEMA 4 PENDANT

NEMA 3R PENDANT

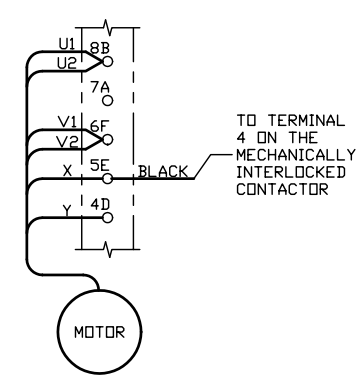

2 GEAR HOIST MOTOR AT 115V

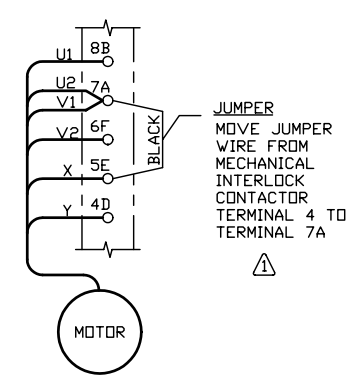

2 GEAR HOIST MOTOR AT 230V

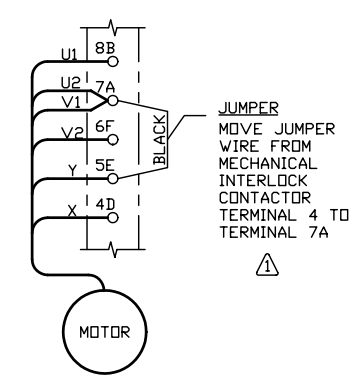

3 GEAR HOIST MOTOR AT 230V

MODEL: EP1A
FOR: 1/4 TO 3 TON SINGLE SPEED HOIST.
VOLTAGE: 115/230-1-60
NOTES: 1) WRAP RED TAPE ON GREEN CONDUCTOR WHICH IS NOT USED FOR GROUNDING PURPOSES.
2) IN THE 3C PENDANT CABLE, RED MAY BE GREEN/RED.
3) 003S, 005L, AND 010L ONLY HAVE ONE CAPACITOR.

NO.	REVISION DESCRIPTION	DRAWN BY	DATE	CHECKED BY	DATE
1	SEE ECN 355	KPN	10/13/03	JLB	10/13/03

TOLERANCES (EXCEPT AS NOTED)	*WIRING DIAGRAM*			
DECIMAL: +/-	HARRINGTON HOISTS AND CRANES			
FRACTIONAL: +/-	DRAWN BY: MJS	SCALE: FIT	DRAWING NO: *61364*	REV. NO *1*
ANGULAR: +/-	CHK'D BY: KPN	DATE: 7/30/02		