Dimensional Drawing

52JE39	REV. -

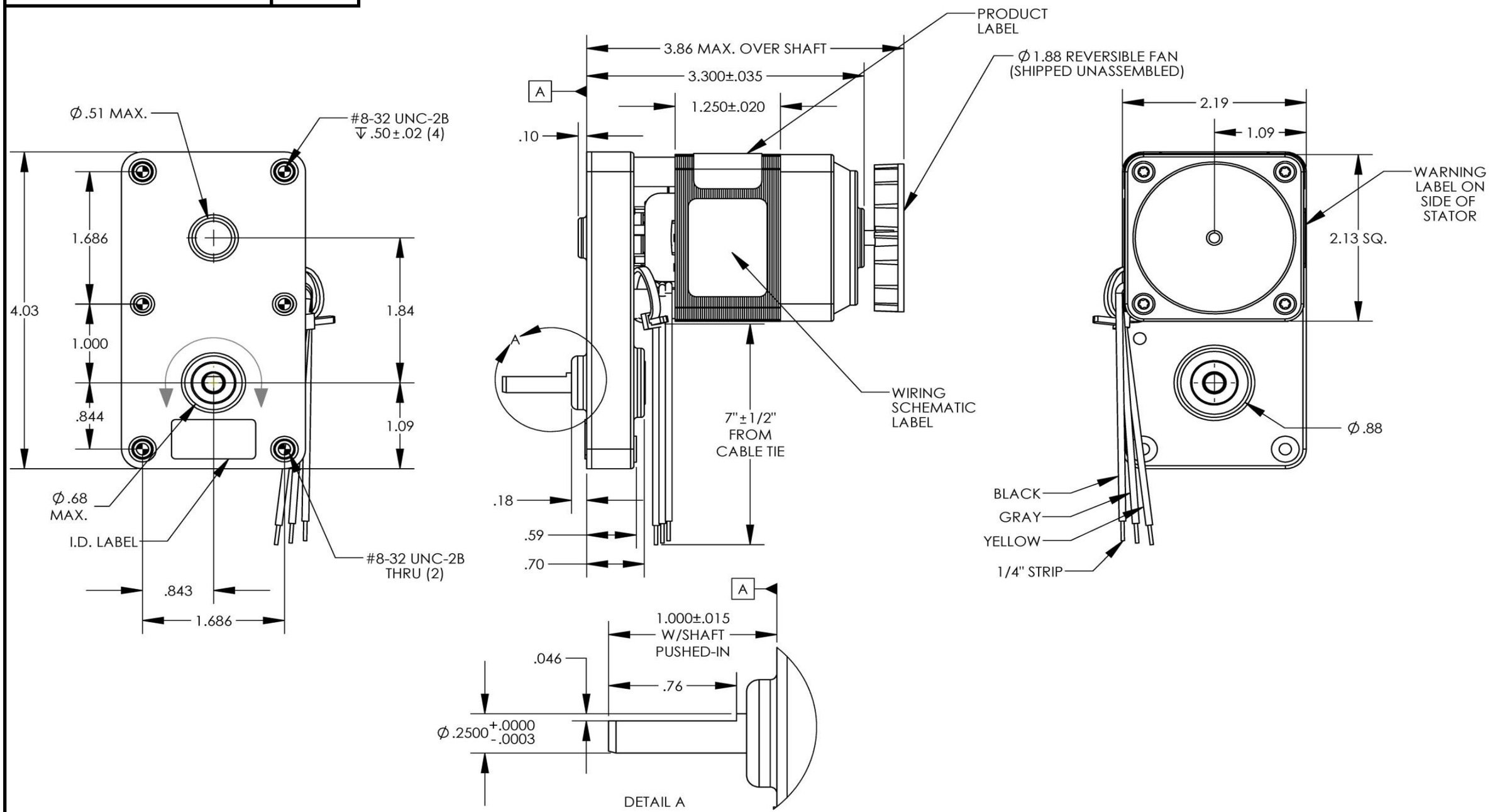

DRAWING NO.	PAGE 1 of 1	REV.
	52JE39	-

Dayton Electric Mfg. Co. Lake Forest, IL 60045 USA

©2016 W.W. Grainger, Inc. This design may not be reproduced, modified or redistributed without written permission from W.W. Grainger, Inc.