M-12902 | 1

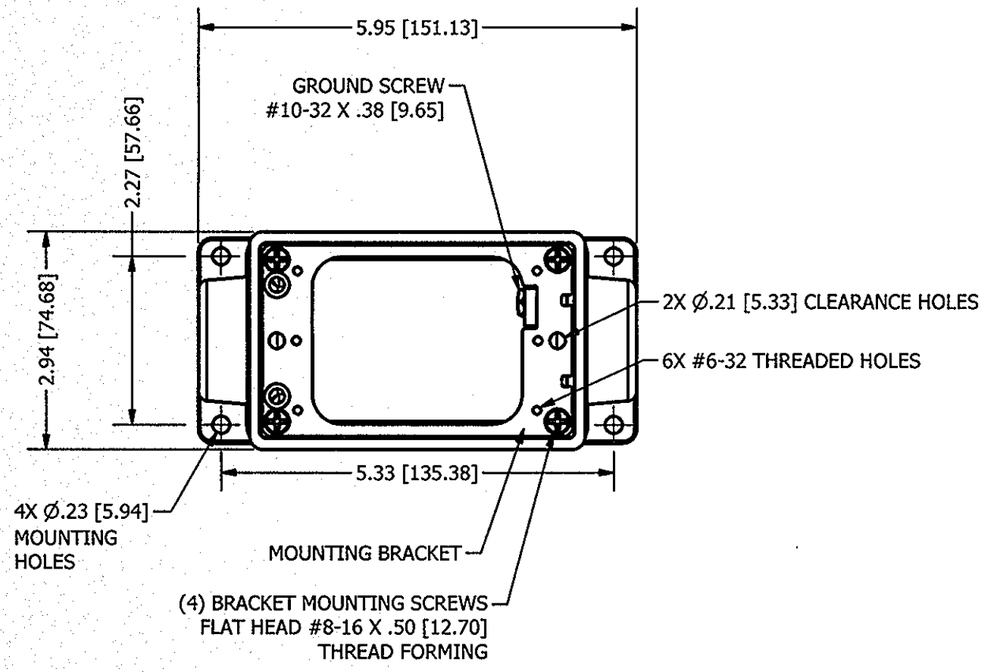

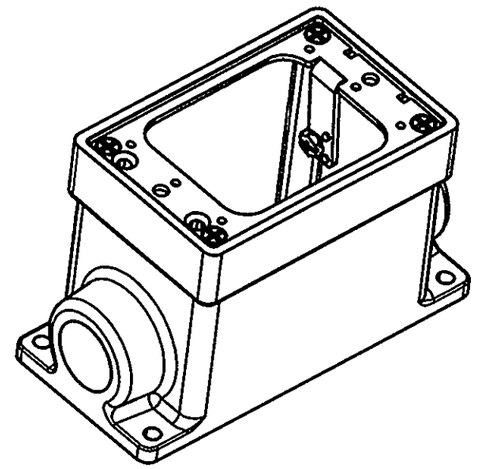

CAT #	DESCRIPTION	HUB SIZE	COLOR
HBL60CM83A	WATERTIGHT FD BOX	3/4"NPT	YELLOW
HBL60CM83WA	WATERTIGHT FD BOX	3/4"NPT	WHITE
HBL6083	WATERTIGHT FD BOX	3/4"NPT	GRAY
HBL60CM84A	WATERTIGHT FD BOX	1"NPT	YELLOW
HBL60CM84WA	WATERTIGHT FD BOX	1"NPT	WHITE
HBL6084	WATERTIGHT FD BOX	1"NPT	GRAY

LIST OF PARTS

DESCRIPTION	MATERIAL	FINISH
FD BOX	PLASTIC PBT	TEXTURED
MOUNTING BRACKET	STAINLESS STEEL TYPE 304	PASSIVATED
SCREW, MOUNTING BRACKET	STAINLESS STEEL TYPE 302	PASSIVATED
SCREW, GROUND	BRONZE	GREEN

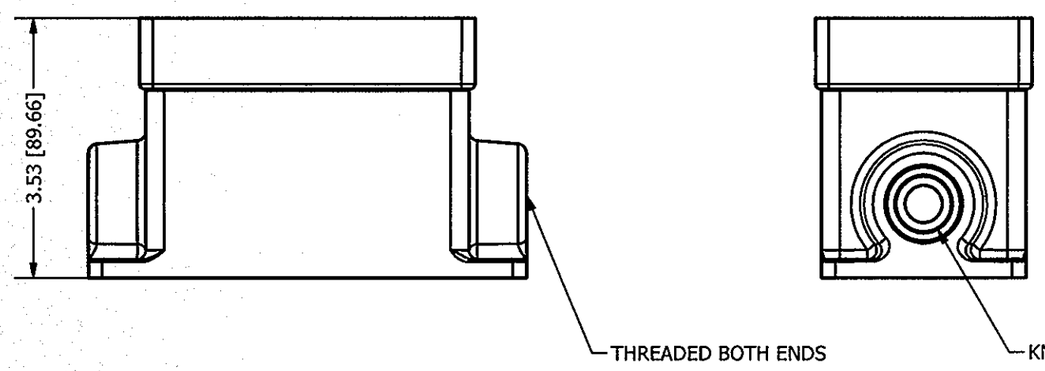

NOTES:
1-ENC TYPE 3R,3RX,4X.
2-FOR WET AND DAMP LOCATIONS.
3-FOR USE WITH NON METALLIC WIRING SYSTEMS ONLY.
4-VOLUME 30 CU.IN. (492 CU.CM).
5-cULus LISTED.
6-DIMENSIONS ARE IN INCHES [mm]

SYM	DESCRIPTION	APP'D	DATE
1	RELEASED PER DCN# 21013. MJZ,TLS	MZ	2-15-15

THE DESIGN AND DIMENSIONS OF THE PRODUCT SHOWN ON THIS DRAWING ARE SUBJECT TO CHANGE WITHOUT NOTICE

TITLE
FD BOX 3/4"NPT OR 1"NPT

TOLERANCES UNLESS OTHERWISE SPECIFIED
FRACTIONS ±1/64
DECIMALS ±.005
ANGLES ±2°

WIRING DEVICE-KELLEMS
HUBBELL INCORPORATED
SHELTON, CT

DR. BY MZ	APP. BY TLS
TR. BY	SCALE 1:2
CHK'D BY TLS	DATE 1-29-15

DIMENSION SHEET FOR CAT. NO.
SEE TABLE
REPAIRABLE ☐
NON-REPAIRABLE ☒
B
M-12902
1

CODE 74545