M-10185 | 1

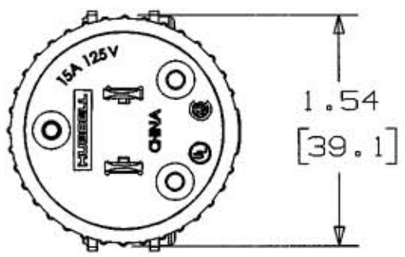


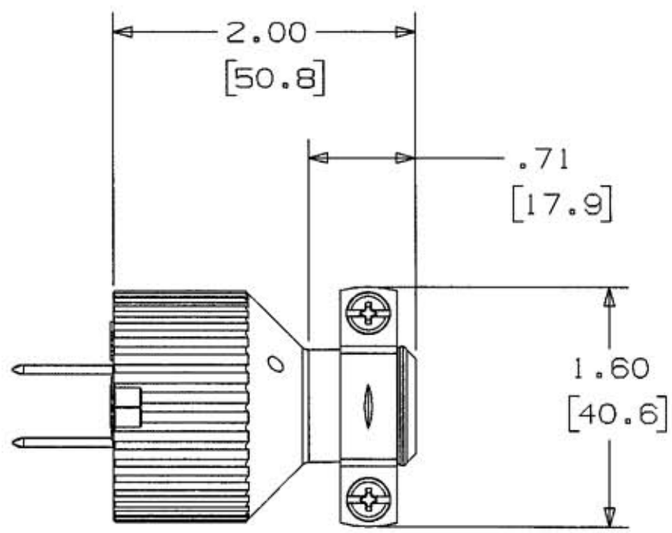


PRODUCT SPECIFICATIONS:

1) WIRE RANGE #14-18 AWG, UP TO Ø.330 COPPER WIRE ONLY
2) UL LISTED AND CSA CERTIFIED.
3) INCHES [MM]

CODE 74545

LIST OF PARTS

| DESCRIPTION | MATERIAL | FINISH |
|---|---|---|
| HOUSING | RUBBER | BLACK |
| BLADES | BRASS | |
| SCREWS | STEEL | |
| CORD CLAMPS | STEEL | |
| BLADE HOLDER | PLASTIC | WHITE |

DIMENSION SHEET FOR CAT. NO. RP646

REPAIRABLE ☐ NON-REPAIRABLE ☒

| SYM | REVISIONS | APP | DATE |
|---|---|---|---|
| 1 | 2/27/07 REVISED AND RELEASED FOR PRODUCTION PER EC 13585 | DP | 02/27/07 |

THE DESIGN AND DIMENSIONS OF THE PRODUCT SHOWN ON THIS DRAWING ARE SUBJECT TO CHANGE WITHOUT NOTICE

TITLE STRAIGHT PLUG, NON-POLARIZED 15A-125V

TOLERANCES UNLESS OTHERWISE SPECIFIED
FRACTIONS ±1/64
DECIMALS ±.005
ANGLES ±2°

WIRING DEVICE-KELLEMS
HUBBELL INCORPORATED
BRIDGEPORT, CT

| | |
|---|---|
| DR. BY AMZ | APP. BY |
| TR. BY | SCALE NONE |
| CHK'D BY | DATE 06/01/06 |

B

M-10185

1