M-12506	1

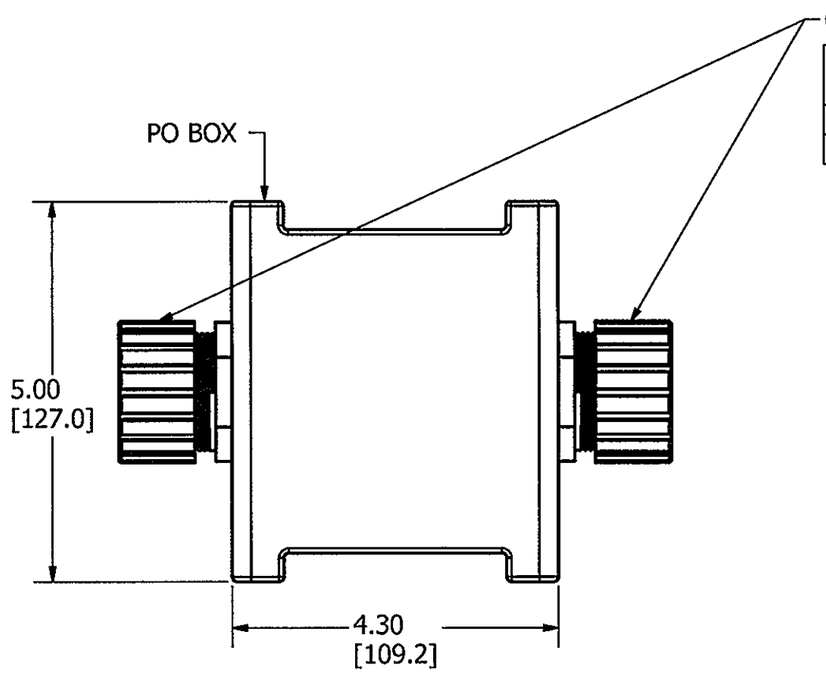

CORD RANGE (IN)	BUSHING DIA. (IN)	GOTCHA RING COLOR
.38-.50	.500±.015	BLUE
.50-.63	.625±.015	BROWN

TABLE A

BOX CAT. #	BOX COLOR
HBL3090F	YELLOW
BRY3090F	YELLOW

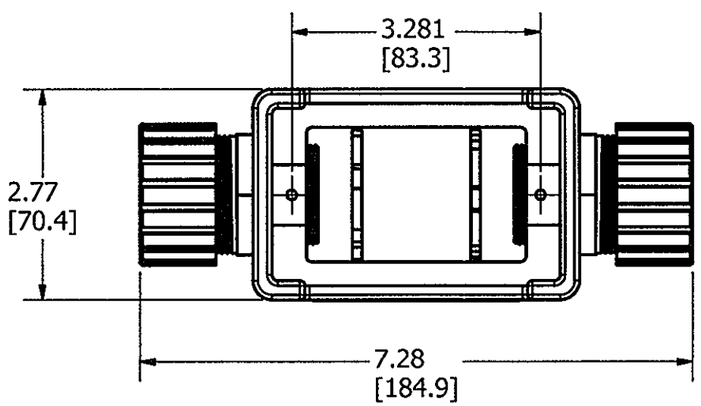

ACCESSORY COVER PLATES

CAT. #	DESCRIPTION	NEMA TYPE
HBL3051	COVER PLATE, DUPLEX	TYPE 1
HBL3052	COVER PLATE, 1.40" DIA. OPENING	TYPE 1
HBL3055	COVER PLATE, 1.60" DIA. OPENING	TYPE 1
HBL3060	COVER PLATE, DECORATOR (GFCI)	TYPE 1
HBL3054	BLANK COVER PLATE	TYPE 3R
HBL3056	DUPLEX LIFT COVER	TYPE 3R
HBL3057	1.40" DIA. OPENING LIFT COVER	TYPE 3R
HBL3058	1.60" DIA. OPENING LIFT COVER	TYPE 3R
HBL3061	DECORATOR (GFCI) LIFT COVER	TYPE 3R

NOTE:
1. ALL DIMENSIONS IN INCHES AND [MM].

LIST OF PARTS

DESCRIPTION	MATERIAL	FINISH
PO BOX	FLEXIBLE PVC	YELLOW
THREADED INSERT	BRASS	-
CONNECTOR BODY	ZYTEL	GRAY
LOCKNUT	CARBON STEEL	ZINC PLATE
BUSHING	RUBBER	BLACK
GOTCHA RING	ZYTEL	SEE TABLE
COMPRESSION NUT	ZYTEL	GRAY

SYM	DESCRIPTION	APPRO	DATE
1	09/10/13 RELEASED FOR PRODUCTION PER DCN20067 EB TLS	TLS TLS	

THE DESIGN AND DIMENSIONS OF THE PRODUCT SHOWN ON THIS DRAWING ARE SUBJECT TO CHANGE WITHOUT NOTICE

TITLE PORTABLE OUTLET BOX

TOLERANCES UNLESS OTHERWISE SPECIFIED
FRACTIONS ±1/64
DECIMALS ±.005
ANGLES ±2°

WIRING DEVICE-KELLEMS
HUBBELL INCORPORATED
SHELTON, CT

DR. BY ebazayev APP. BY TLS
TR. BY SCALE
CHK'D BY TLS DATE 9/25/2013

DIMENSION SHEET FOR CAT. NO. SEE TABLE A

REPAIRABLE ☐ NON-REPAIRABLE ☐

B M-12506 1

CODE 74545