M-12926 | 1

CATALOG NUMBER	BODY COLOR	GOTCHA RING COLOR CODE	NPT HUB SIZE	CORD DIA. RANGE	*A ACROSS CORNERS	*A ACROSS FLATS	(B) 4	C	ØD (THROAT DIA.)	*E ACROSS CORNERS	*E ACROSS FLATS
SHC1020ZP	ZINC-PLATED STEEL	ORANGE	1/2"	.13-.19 [3.2-4.7]	1.30 [33.0]	1.13 [28.7]	1.20 [30.5]	.55 [14.0]	.64 [16.3]	1.11 [28.2]	1.00 [25.4]
SHC1021ZP	ZINC-PLATED STEEL	RED	1/2"	.19-.25 [4.7-6.3]	1.30 [33.0]	1.13 [28.7]	1.20 [30.5]	.55 [14.0]	.64 [16.3]	1.11 [28.2]	1.00 [25.4]
SHC1022ZP	ZINC-PLATED STEEL	WHITE	1/2"	.25-.38 [6.3-9.7]	1.30 [33.0]	1.13 [28.7]	1.20 [30.5]	.55 [14.0]	.64 [16.3]	1.11 [28.2]	1.00 [25.4]
SHC1023ZP	ZINC-PLATED STEEL	BLUE	1/2"	.38-.50 [9.7-12.7]	1.30 [33.0]	1.13 [28.7]	1.20 [30.5]	.55 [14.0]	.64 [16.3]	1.11 [28.2]	1.00 [25.4]
SHC1024ZP	ZINC-PLATED STEEL	BROWN	1/2"	.50-.63 [12.7-15.9]	1.30 [33.0]	1.13 [28.7]	1.20 [30.5]	.55 [14.0]	.64 [16.3]	1.11 [28.2]	1.00 [25.4]
SHC1030ZP	ZINC-PLATED STEEL	ORANGE	3/4"	.13-.19 [3.2-4.7]	1.30 [33.0]	1.13 [28.7]	1.20 [30.5]	.55 [14.0]	.64 [16.3]	1.29 [32.8]	1.13 [28.7]
SHC1031ZP	ZINC-PLATED STEEL	RED	3/4"	.19-.25 [4.7-6.3]	1.30 [33.0]	1.13 [28.7]	1.20 [30.5]	.55 [14.0]	.64 [16.3]	1.29 [32.8]	1.13 [28.7]
SHC1032ZP	ZINC-PLATED STEEL	WHITE	3/4"	.25-.38 [6.3-9.7]	1.30 [33.0]	1.13 [28.7]	1.20 [30.5]	.55 [14.0]	.64 [16.3]	1.29 [32.8]	1.13 [28.7]
SHC1033ZP	ZINC-PLATED STEEL	BLUE	3/4"	.38-.50 [9.7-12.7]	1.30 [33.0]	1.13 [28.7]	1.20 [30.5]	.55 [14.0]	.64 [16.3]	1.29 [32.8]	1.13 [28.7]
SHC1034ZP	ZINC-PLATED STEEL	BROWN	3/4"	.50-.63 [12.7-15.9]	1.30 [33.0]	1.13 [28.7]	1.20 [30.5]	.55 [14.0]	.64 [16.3]	1.29 [32.8]	1.13 [28.7]

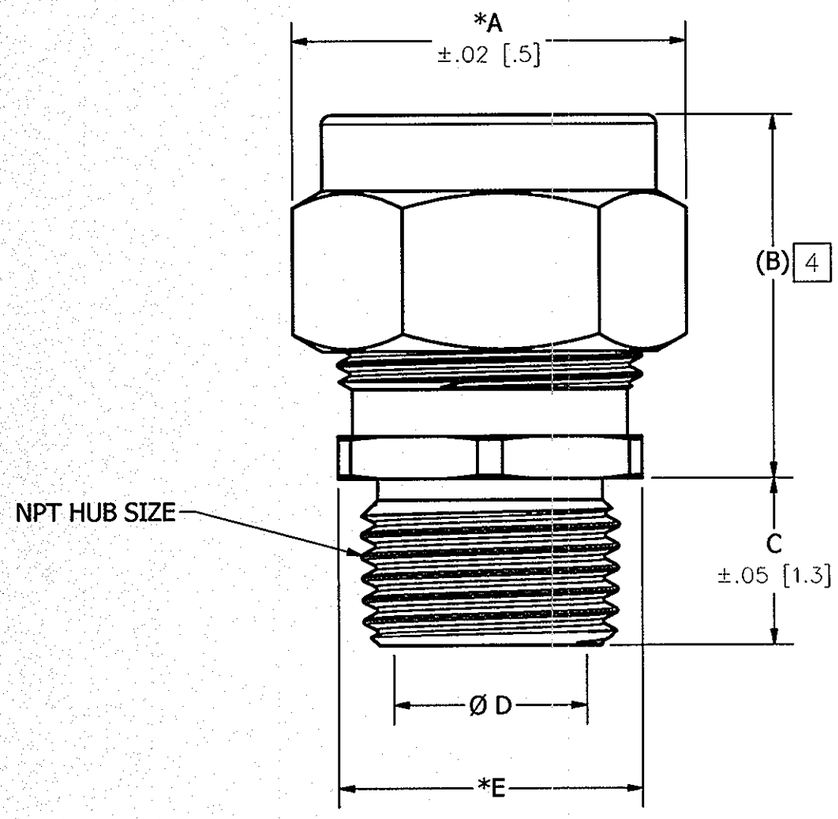

NOTES:

1. DIMENSIONS ARE IN INCHES [MM].
2. LOCKNUT PURCHASED SEPARATELY.
3. BUSHING COATED WITH AMBER PETROLEUM JELLY.

4 REFERENCE ONLY, DIMENSION MAY VARY.

LIST OF PARTS

DESCRIPTION	MATERIAL	FINISH
CORD CONN. BODY, STR. MALE	STEEL	ZINC PLATED
NUT	STEEL	ZINC PLATED
BUSHING	BLACK NEOPRENE	SEE NOTE 3
GOTCHA RING	NYLON	SEE TABLE

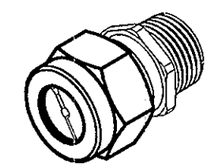

CATALOG NO. SHC1020ZP
(NOT SHOWN TO SCALE)

REV	DESCRIPTION	APP	DATE
1	INITIAL RELEASE PER DCN 21189	DDL PJB	05/06/15

THE DESIGN AND DIMENSIONS OF THE PRODUCT SHOWN ON THIS DRAWING ARE SUBJECT TO CHANGE WITHOUT NOTICE

TITLE
STRAIGHT ZINC PLATED STEEL CORD CONNECTOR FORM 2

TOLERANCES UNLESS OTHERWISE SPECIFIED
.XX = ± .01
.XXX = ± .005
ANGLES = ± 2°

WIRING DEVICE-KELLEMS
HUBBELL INCORPORATED
SHELTON, CT

DR. BY	SR	APP. BY	
TR. BY		SCALE	2:1
CHK. BY	DDL	DATE	05/06/15

DIMENSION SHEET FOR CAT. NO.
SEE TABLE

REPAIRABLE ☐
NON-REPAIRABLE ☐

B

M-12926

1

CODE 74545