M-9203 | 1

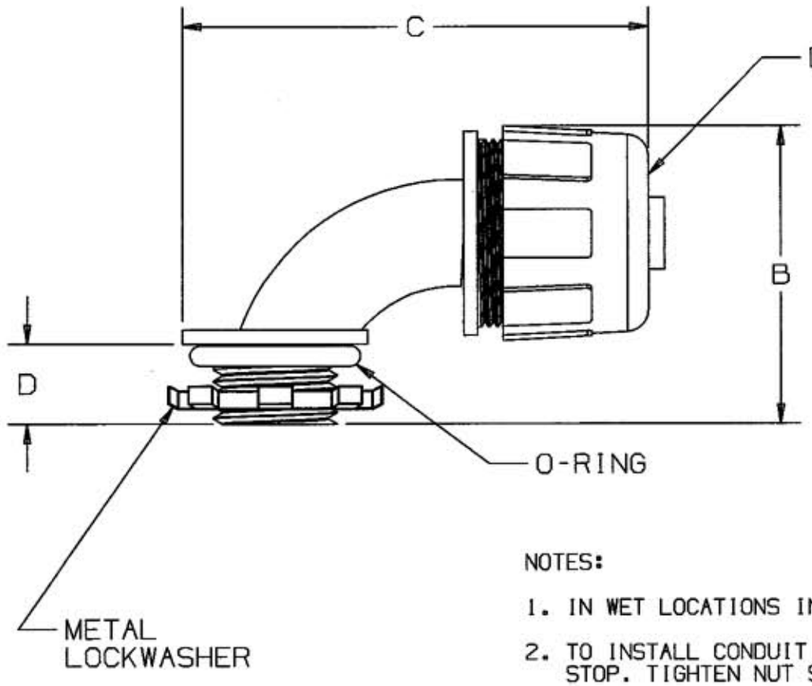

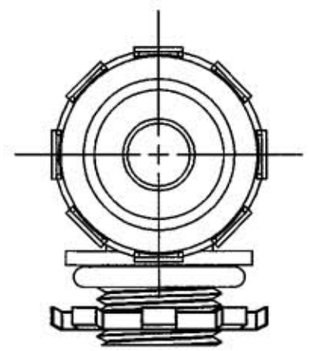

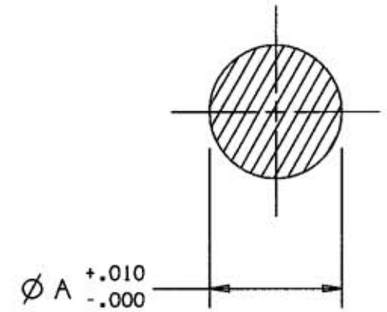

SUGGESTED CLEARANCE HOLE
FOR NON-THREADED MOUNTING

NOTES:

1. IN WET LOCATIONS INSTALL THE O-RING BETWEEN THE BOX AND FITTING.
2. TO INSTALL CONDUIT OR TUBING PUSH IT ONTO THE FITTING TILL IT HITS THE END STOP. TIGHTEN NUT SO THERE IS LITTLE TO NO GAP BETWEEN IT AND THE BODY.
3. TEMPERATURE RANGE: 125° C, MAX. TEMP. ON THE PART SHALL NOT EXCEED 105° C.
4. PROTECTION CLASS: IP 68 PER DIN 40050 UP TO 70 PSI (5 BAR) WATER PRESSURE.
5. UL LISTED AND CSA CERTIFIED.
6. DIMENSIONS ARE IN INCHES AND METRIC.
7. TOLERANCE: .XX± .015 .XXX± .005 ANG.±2° GENERAL TOLERANCE DOES NOT APPLY.

COLOR	CAT. NO.	THREAD SIZE	FITS CONDUIT SIZES TRADE SIZE	FITS CONDUIT SIZES METRIC DES.	APPROVALS UL	APPROVALS CSA	PART DIMENSIONS Ø A CLEARANCE HOLE IN.	Ø A CLEARANCE HOLE MM	-B- MAXIMUM O.A. HEIGHT IN.	-B- MAXIMUM O.A. HEIGHT MM	-C- MAXIMUM O.A. LENGTH IN.	-C- MAXIMUM O.A. LENGTH MM	-D- THREAD LENGTH IN.	-D- THREAD LENGTH MM	BOX INSTALLATION O-RING & METAL LOCKNUT
BLACK	P0389NBK	NPT 1/2	3/8	12	X	X	.875	22.2	1.98	50.3	2.91	73.9	.52	13.2	X
GRAY	P0389NGY	NPT 1/2	3/8	12	X	X	.875	22.2	1.98	50.3	2.91	73.9	.52	13.2	X
BLACK	P0509NBK	NPT 1/2	1/2	16	X	X	.875	22.2	1.98	50.3	2.91	73.9	.52	13.2	X
GRAY	P0509NGY	NPT 1/2	1/2	16	X	X	.875	22.2	1.98	50.3	2.91	73.9	.52	13.2	X
BLACK	P0759NBK	NPT 3/4	3/4	21	X	X	1.109	28.2	2.29	58.2	3.17	80.5	.52	13.2	X
GRAY	P0759NGY	NPT 3/4	3/4	21	X	X	1.109	28.2	2.29	58.2	3.17	80.5	.52	13.2	X
BLACK	P1009NBK	NPT 1	1	27	X	X	1.375	34.9	2.83	71.9	3.96	100.6	.69	17.5	X
GRAY	P1009NGY	NPT 1	1	27	X	X	1.375	34.9	2.83	71.9	3.96	100.6	.69	17.5	X

CODE 74545

LIST OF PARTS

DESCRIPTION	MATERIAL	FINISH
CONNECTOR	NYLON	BLACK/GRAY
O-RING	ELASTOMER	BLACK
METAL LOCKWASHER	STEEL	ZINC PLT.

SYM	REVISIONS	APP	DATE
1	INITIAL RELEASE DCN11151	WWH	8-11-03

THE DESIGN AND DIMENSIONS OF THE PRODUCT SHOWN ON THIS DRAWING ARE SUBJECT TO CHANGE WITHOUT NOTICE

TITLE
LIQUID-TIGHT FLEXIBLE NONMETALLIC CONDUIT OR TUBING 90° FITTING

TOLERANCES UNLESS OTHERWISE SPECIFIED
FRACTIONS ± 1/64
DECIMALS ± .005
ANGLES ± 2°

WIRING DEVICE-KELLEMS
HUBBELL INCORPORATED
BRIDGEPORT, CT

DR. BY PAC | APP. BY WWH
TR. BY | SCALE 1-1
CHK'D BY WWH | DATE 8-11-03

DIMENSION SHEET FOR CAT. NO. SEE TABLE

REPAIRABLE ☐ NON-REPAIRABLE ☐

B

M-9203

1